For Global Market

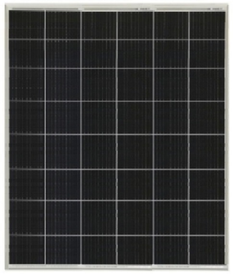

Maysun Solar

Polycrystalline PV Module

MS 200W POLY 48 Series

5BB

200W

- ▶ High PID resist performance
- ▶ Steady power output
- ▶ Reducing cell series resistance
- ▶ More power output

System voltage 1000V/1500V standard

EN

ELECTRICAL SPECIFICATIONS

STC rated output (P_{mpp})*	200wp
PV Module size	1320*992*35mm
Standard sorted output	0/+5Wp
Warranted power output STC ($P_{nominal}$)	200wp
Rated voltage (V_{mpp}) at STC	24v
Rated current (I_{mpp}) at STC	8.36A
Open circuit voltage (V_{oc}) at STC	28.6V
Short circuit current (I_{sc}) at STC	8.98A
Module efficiency	15.4%

Maximum system voltage (IEC)	1000V_{DC} / 1500V_{DC}
Number of diodes	2
Maximum series fuse rating	15 A
Operating Temperature	-40℃ to +85℃
Temperature coefficient (P_{mpp})	- 0.407%/K
Temperature coefficient (I_{sc})	+0.049%/K
Temperature coefficient (I_{mpp})	- 0.000%/K
Temperature coefficient (V_{mpp})	- 0.408%/K
Temperature coefficient (V_{oc})	- 0.310%/K
Normal operating cell temperature (NOCT)	43±2°C

* Measurement tolerance +/- 3%

IEC 61701 Salt Spray test Severity (3) | IEC 60068-2-68 Sand test | IEC 62804 1500V PID test

MAYSUN SOLAR

RELATED PARAMETERS

Cell type	Polycrystalline
Number of cells / cell arrangement	48/6*8
Cells dimension	6″
Packing unit	2pcs / carton
Weight of packing unit (for container)	30kg

MECHANICAL SPECIFICATIONS

Outer dimensions (L x W x H)	1320*992*35mm
Frame technology	Aluminum, silver anodized
Module composition	Glass / EVA / Backsheet (white)
Weight (module only)	14.8kg
Front glass thickness	3.2 mm / 0.13 in
Junction box IP rating	IP 65/67
①Cable length(IEC)	600/900 mm / 23.62/35.43 in
Cable diameter (IEC)	12 AWG /4 mm^2
②Maximum load capacity	5400 Pa
Fire performance (IEC)	Class C
Connector type (IEC)	MC4 compatible

Refer to Maysun Solar crystalline installation manual.

QUALIFICATION AND LINEAR WARRANTIES

Product standard	IEC61215, 61730
Extended product warranty	12 years
Output decline 3%/year performance P_{mpp} (STC)	1st year
Output decline 0.7%/year performance P_{mpp} (STC)	2nd~ 25th years

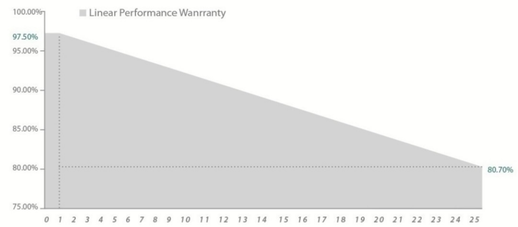

I-V Curves of PV module MS260P-60 at various solar irradiance

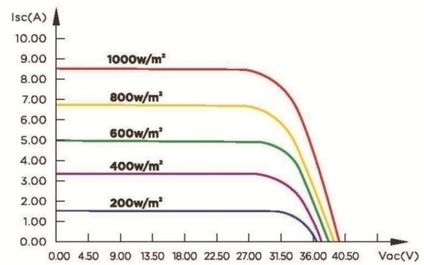

MODULE DIMENSION DETAILS

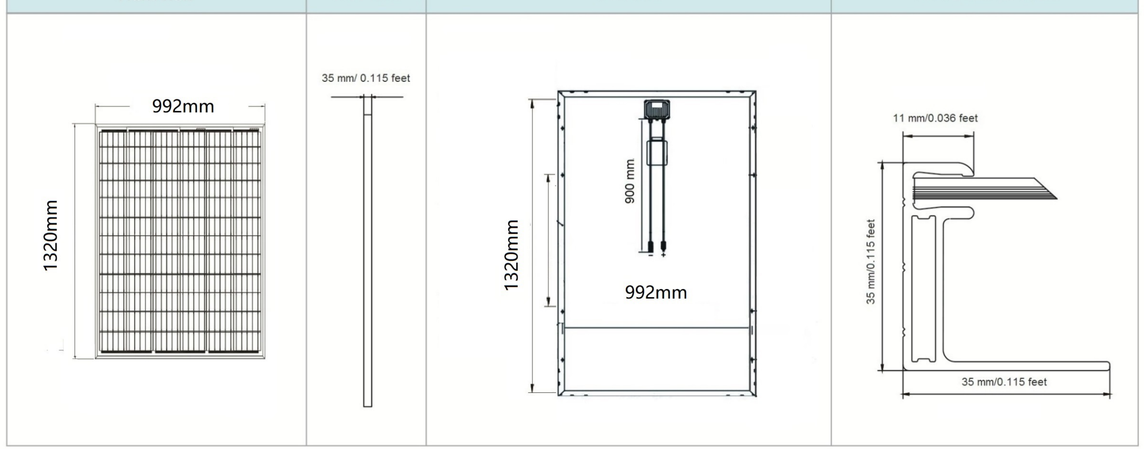

Maysun Solar FZCO Reserves the right of final interpretation.
Specifica tions and designs included in this datasheet are subject to change without notice.

Website: www.maysunsolar.com